HELIOSURE / 3BUILT MOTORSPORTS

END USER AGREEMENT

NOTICE TO USER: PLEASE READ THIS AGREEMENT CAREFULLY. BY INSTALLING AND/OR USING ALL OR ANY PORTION OF THIS PRODUCT YOU ACCEPT ALL THE TERMS AND CONDITIONS OF THIS AGREEMENT; WARRANTY IN SECTION 3; LIABILITY IN SECTION 5. YOU AGREE THAT THIS AGREEMENT IS LIKE ANY WRITTEN NEGOTIATED AGREEMENT SIGNED BY YOU. THIS AGREEMENT IS ENFORCEABLE AGAINST YOU AND ANY LEGAL ENTITY THAT OBTAINED THE PRODUCT AND ON WHOSE BEHALF IT IS USED.

IF YOU DO NOT AGREE TO THE TERMS OF THIS AGREEMENT OR ARE UNDER 18 YEARS OLD, DO NOT INSTALL OR USE THIS PRODUCT. RETURN UNUSED PRODUCT WITHIN TEN (10) DAYS OF PURCHASE FOR A FULL REFUND OF PURCHASE PRICE. VISIT *HTTP://WWW.HELIOSURE.COM* OR E-MAIL *SALES@HELIOSURE.COM* FOR REFUND INFORMATION.

1. DEFINITIONS
    a. "3Built Motorsports", a California Sole Proprietorship, 7622 Farmdale Ave., North Hollywood, Ca. 91605.
    b. "Heliosure" is 3Built Motorsports
    c. "Product" means any item sold 3Built Motorsports and/or Heliosure.
    d. "Documentation" means the Installation Instructions or other paperwork sent with the Product.

2. FUNCTIONALITY AND RANGE. Some Products are radio frequency controlled devices. They are susceptible to radio frequency interference. The control signal is encoded to reduce the possibility of interference, but it cannot be eliminated. The interference may cause the Product not to function as stated or desired. This may include non-operation, decreased range, and accidental activation of the Product.

3. LIMITED WARRANTY. 3Built Motorsports warrants to the individual or entity that first purchases the Product pursuant to the terms of this agreement that the Product will perform substantially in accordance with the Documentation for the sixty (60) day period following receipt of the Product when used as directed in the Documentation. Non-substantial variation of performance from the Documentation does not establish a warranty right. THIS LIMITED WARRANTY DOES NOT APPLY TO IMPROPERLY INSTALLED, ALTERED OR ABUSED PRODUCT. All warranty claims must be made, along with proof of purchase, within such sixty (60) day period. If the Product does not perform substantially in accordance with the Documentation, the entire liability of 3Built Motorsports and its affiliates and your exclusive remedy will be limited to either, at 3Built Motorsports' option, replacement of the Product or refund of the purchase price paid for the Product. THE LIMITED WARRANTY SET FORTH IN THIS SECTION GIVES YOU SPECIFIC LEGAL RIGHTS. YOU MAY HAVE ADDITIONAL RIGHTS WHICH VARY FROM JURISDICTION TO JURISDICTION.

4. DISCLAIMER. THE FOREGOING LIMITED WARRANTY IS THE ONLY WARRANTY MADE BY 3BUILT MOTORSPORTS AND ITS AFFILIATES AND STATES THE SOLE AND EXCLUSIVE REMEDIES FOR 3BUILT MOTORSPORTS, ITS AFFILIATES OR SUPPLIERS' BREACH OF WARRANTY. EXCEPT FOR THE

FOREGOING LIMITED WARRANTY AND ANY WARRANTY, CONDITION, REPRESENTATION OR TERM TO THE EXTENT THE SAME CANNOT OR MAY NOT BE EXCLUDED OR LIMITED BY LAW APPLICABLE TO YOU IN YOUR JURISDICTION, 3BUILT MOTORSPORTS AND ITS AFFILIATES AND SUPPLIERS PROVIDE THE PRODUCT *AS-IS* AND *WITH ALL FAULTS* AND EXPRESSLY DISCLAIM ALL OTHER WARRANTIES, CONDITION, REPRESENTATIONS OR TERMS, EXPRESS OR IMPLIED, WHETHER BY STATUTE, COMMON LAW, CUSTOM, USAGE OR OTHERWISE AS TO ANY MATTER, INCLUDING BUT NOT LIMITED TO PERFORMANCE, SECURITY, NON-INFRINGEMENT OF THIRD PARTY RIGHTS, INTEGRATION, MERCHANTABILITY, QUIET ENJOYMENT, SATISFACTORY QUALITY OR FITNESS FOR ANY PARTICULAR PURPOSE. The provisions of Sections 4 and Section 5 will survive the termination of this agreement, howsoever caused, but this will not imply or create any continued right to use the Product after termination of this Agreement.

5. **LIMITATION OF LIABILITY**. EXCEPT FOR THE EXCLUSIVE REMEDY SET FORTH ABOVE AND AS OTHERWISE PROVIDED IN SECTION 3, IN NO EVENT WILL 3BUILT MOTORSPORTS OR ITS AFFILIATES OR SUPPLIERS BE LIABLE TO YOU FOR ANY LOSS, DAMAGES, CLAIMS OR COSTS WHATSOEVER INCLUDING ANY CONSEQUENTIAL, INDIRECT OR INCIDENTAL DAMAGES, ANY LOST PROFITS OR LOST SAVINGS, ANY DAMAGES RESULTING FROM BUSINESS INTERRUPTION, PERSONAL INJURY OR FAILURE TO MEET ANY DUTY OF CARE, OR CLAIMS BY A THIRD PARTY, EVEN IF A 3BUILT REPRESENTATIVE HAS BEEN ADVISED OF THE POSSIBILITY OF SUCH LOSS, DAMAGES, CLAIMS OR COSTS. THE FOREGOING LIMITATIONS AND EXCLUSIONS APPLY TO THE EXTENT PERMITTED BY APPLICABLE LAW IN YOUR JURISDICTION. 3BUILT MOTORSPORTS' AGGREGATE LIABILITY AND THAT OF ITS AFFILIATES AND SUPPLIERS UNDER OR IN CONNECTION WITH THIS AGREEMENT WILL BE LIMITED TO THE AMOUNT PAID FOR THE PRODUCT, IF ANY. THIS LIMITATION WILL APPLY EVEN IN THE EVENT OF A FUNDAMENTAL OR MATERIAL BREACH OR A BREACH OF THE FUNDAMENTAL OR MATERIAL TERMS OF THIS AGREEMENT.

6. INDEMNITY. You agree to hold 3Built Motorsports harmless from any and all liabilities, losses, actions, damages, or claims (including all reasonable expenses, costs, and attorneys fees) arising out of or relating to any use of, or reliance on, the Product, including, without limitation reliance on a) batteries, b) range, c) installation, d) performance, and e) failure to exercise reasonable judgment. Nothing contained in this agreement limits 3Built Motorsports' liability to you in the event of death or personal injury resulting from 3Built Motorsports' negligence or for the tort of deceit (fraud). 3Built Motorsports is acting on behalf of its affiliates and suppliers for the purpose of disclaiming, excluding and limiting obligations, warranties and liability, but in no other respects and for no other purpose.

7. GOVERNING LAW. This agreement will be governed by and construed in accordance with the substantive laws in force in the State of California, if the Product is purchased when you are in the United States, Canada, or Mexico.

8. GENERAL PROVISIONS. If any part of this agreement is found void and unenforceable, it will not affect the validity of the balance of this agreement, which will remain valid and enforceable according to its terms. This agreement will not prejudice the statutory rights of any party dealing as a consumer. This agreement may only be modified by a writing signed by an authorized member of 3Built Motorsports. This is the entire agreement between 3Built Motorsports and you relating to the Product and it supercedes any prior representations, discussions, undertakings, communications, or advertising relating to the Product.

RailWave

Installation and Use Instructions

Heliosure/3Built Motorsports
North Hollywood, CA

www.heliosure.com

sales@heliosure.com

818-688-7550

RECEIVER SUMMARY

- Receives speed & function commands from a Railwave transmitter
    - Includes backup Wi-Fi network to control train from the Web User Interface (Web UI) page. No router or other hardware is needed.
- Drives a motor driver through one of five selectable motor-driver modes.
    - Dimension Engineering's Sabertooth (packet serial with safety timeout)
    - Dimension Engineering's Syren
        - (serial (no safety timeout)
        - RC mode (1000-2000ms pulse width)
    - Cytron's 30 amp driver (PWM (20kHz) & direction (high/low))
    - 8871 Based mini drivers (PWM (17kHz) forward or PWM (17kHz) reverse)
- Controls headlight, reverse headlight, horn, bell (steady or pulsed), sound, auxiliary, brake, and two alternating "ditch" lights.
- Monitors battery voltage and shows state of charge on internal LED. (LiFePO4, Lead Acid, or AGM)
- Web User Interface (WebUI) to configure receiver and control locomotive
- Supports offline OTA firmware updates

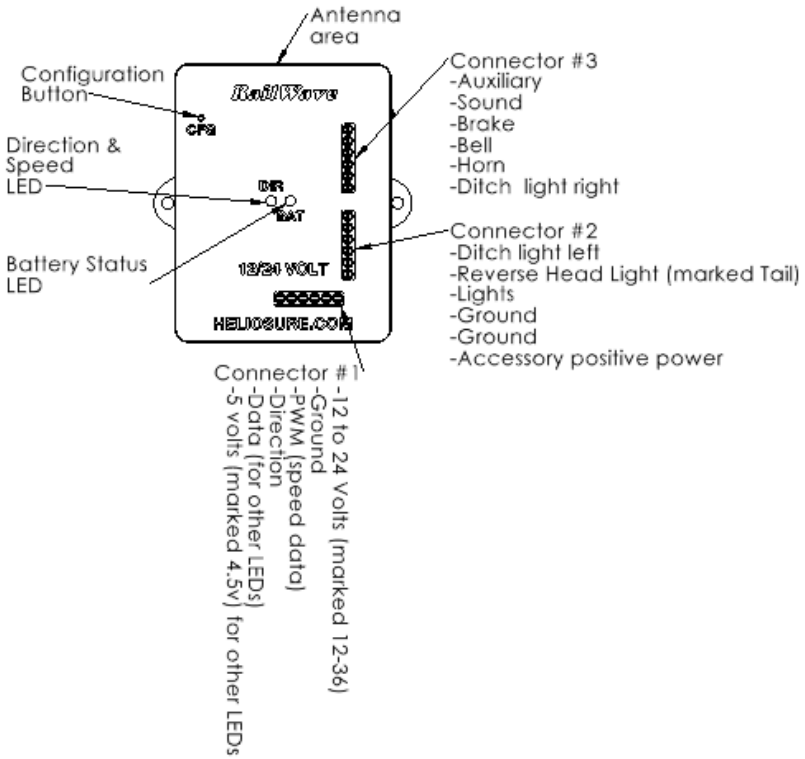

Fig. 1

MOUNTING & WIRING THE MOTOR CONTROL

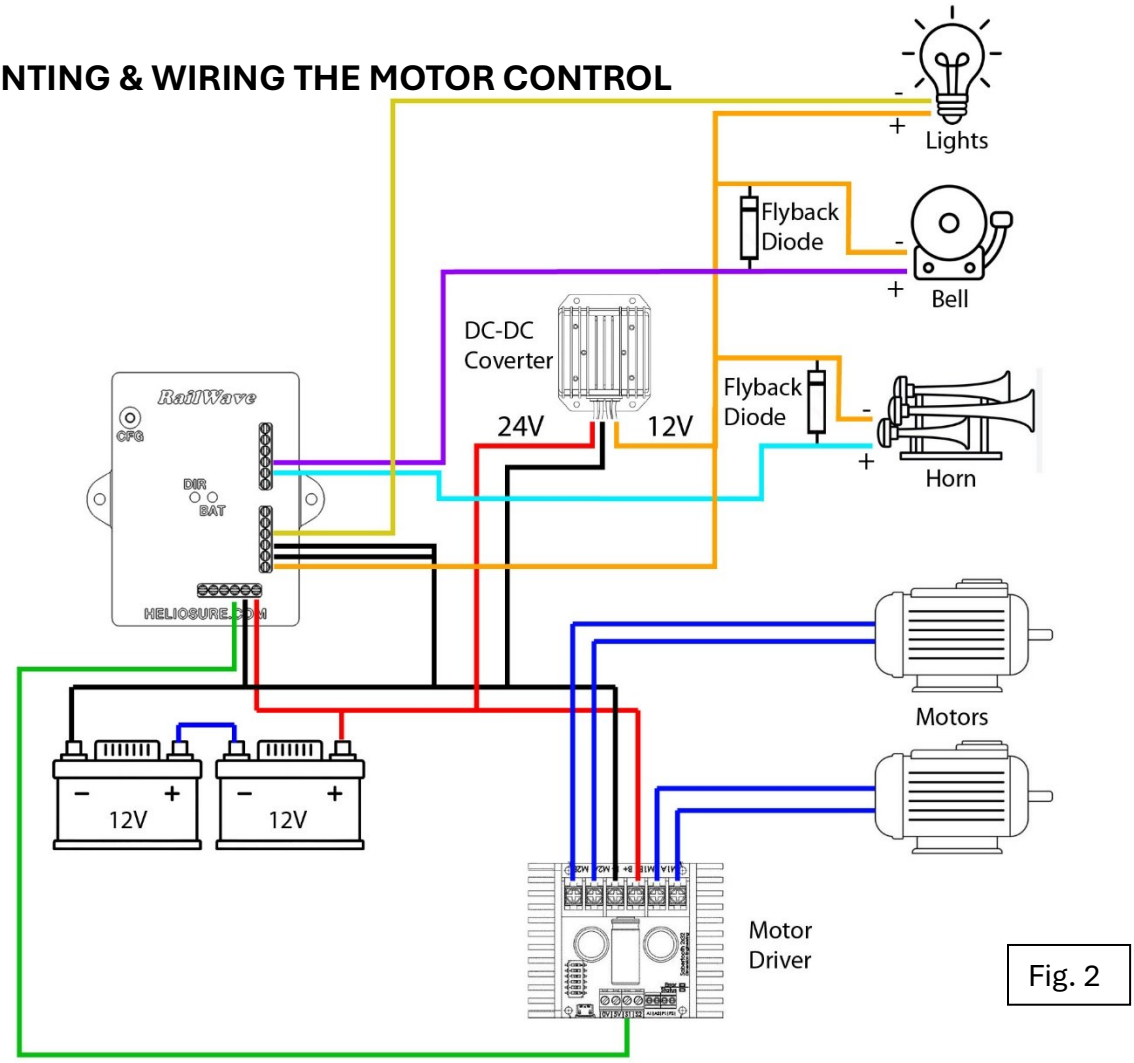

Fig. 2

1. Mount the receiver in a way that the antenna area is away from as much metal as possible. Metal near or enclosing the antenna area will limit range.
2. You can remove the cover to make connecting easier but it's not necessary
    1. If desired, instead of using the terminal blocks, there are solder holes for each wire connection.
3. Connect the PWM terminal to your motor driver. This wire will output serial data, RC data, or 20kHz PWM. Check your motor driver user guide.
4. Some motor drivers need a second wire to indicate forward or reverse direction. Connect the Direction terminal to your motor driver.

Driver Mode	PWM Terminal connects to:	Direction Terminal connects to:
Sabertooth 2x32	S1	none
Syren (serial)	S1	none
Syren (RC)	S1	none
Cytron MD30C	PWM Pin	DIR pin
Adafruit DRV8871	IN1	IN2

5. Connect the 12 to 36v (Lead Acid, LiFePO4, or AGM battery) positive battery lead to 12-36 volt terminal on Connector #1
6. Connect the 12 to 36v (Lead Acid, LiFePO4, or AGM battery) negative battery lead to the ground terminal on Connector #1
7. Finish wiring your motor driver
8. Select the battery voltage on the Volt Select dip switch under the cover. ****NOTE***: If you select a lower voltage than the actual battery voltage, you will damage the receiver. If you're not sure, leave both Off and disable the battery check in the Web UI.

Volt Select Dip Switch		
down is OFF, up is ON		
Battery Voltage	**Left**	**Right**
36 volt	Off	Off
24 volt	Off	On
12 volt	On	On

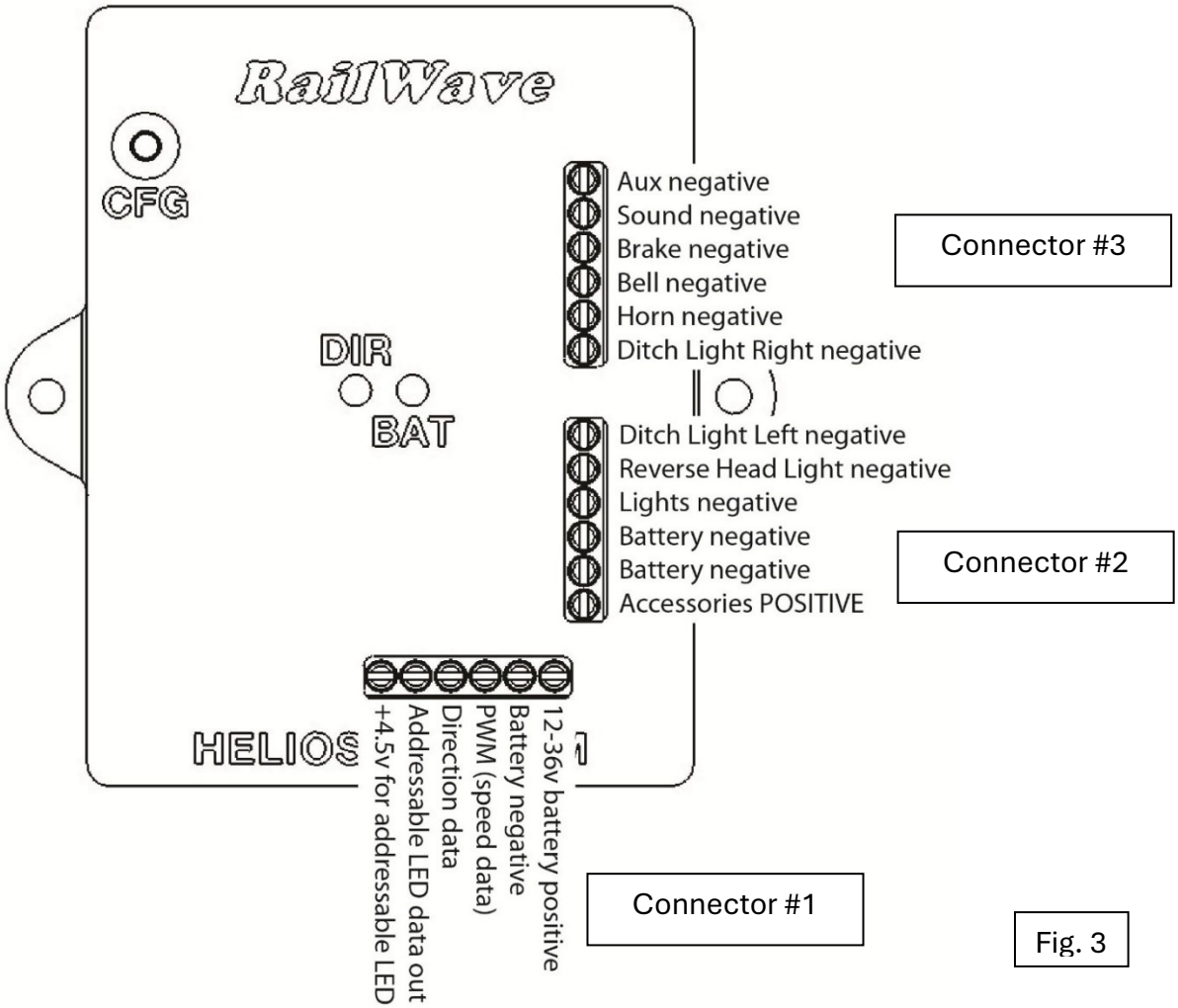

Fig. 3

RECEIVER CONFIGURATION MODE

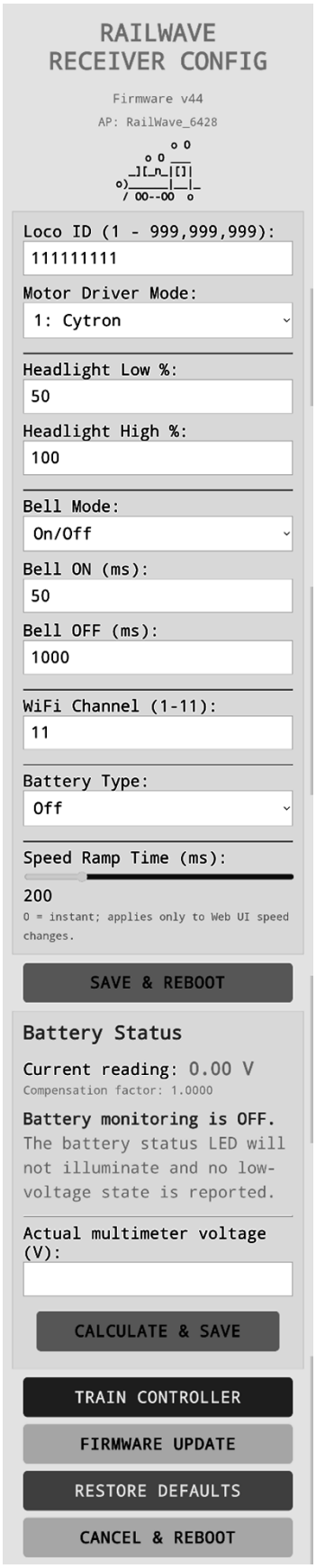

Initial Configuration and Test

1. Power on the locomotive. The Receiver's DIR LED will be orange while booting and then either turn off if connected to the transmitter or blink purple if not connection is found.
2. Press the Configuration button for 2 seconds and the DIR LED will turn Blue.
3. Connect to the receiver's WebUI (webpage user interface) with any device capable of connecting to a WiFi network and has a web browser.
    1. When the Receiver's LED is blue, a WiFi network is created. The network name will begin with "RailWave_RX" and have a random number after that.
    2. Select that network and then proceed to Sign-in. That will force the browser to a configuration page for the Receiver.
4. Pick your Locomotive (Loco) ID. Select a large and unique number to avoid conflicts with someone else's controller. Write this number down. You will need it to configure your Transmitter with the same code.
5. Set the Motor Drive mode.
6. All other settings can be left in default mode for now.
7. Press Save and Reboot
8. Run a test of the system with the locomotive's wheels elevated off the ground to avoid a runaway situation and to make sure the motor or motors are wired correctly.
9. **Motion is inhibited at boot.** The receiver will not drive the motor until it receives a **zero-speed** command from the transmitter or the Web UI's train controller.
10. Once the locomotive is confirmed to work properly, continue wiring the accessories.

Enter and Exit Configuration Mode

1. Hold the Configuration button for 2 second.
2. The locomotive stops, Dir LED turns blue,
3. To leave Configuration Mode:
    - Quick-press the Configuration button or
    - Use Save & Reboot / Cancel & Reboot on the WebUI

Wi-Fi Settings

- SSID: Railwave-Rx_XXXX (XXXX = 4-digit suffix, default random 1000–9999; shown on the configuration page)
- **Open network** (no password)
- Address: **192.168.4.1 or** **http://heliosure.local**
- Captive portal: any DNS request redirects to the configuration page
- The AP always runs on Wi-Fi channel 11 (the configurable wifiChannel applies to **ESP-NOW** in normal run mode, not to the AP)

  Updating firmware
- **Phone tip:** On Android/iOS, if you arrive via a "Sign-in" captive-portal popup, the file picker on the OTA page will not work. Turn off cellular data, open Chrome/Safari, and navigate to **http://heliosure.local** or **http://192.168.4.1** manually.

Loco ID

- This is the unique ID for that particular locomotive. Select a large number to avoid conflicts with other controllers.

Motor Driver Mode

- Select your motor driver

Driver Mode	PWM Terminal connects to:	Direction Terminal connects to:
Sabertooth 2x32	S1	none
Syren (serial)	S1	none
Syren (RC)	S1	none
Cytron MD30C	PWM Pin	DIR pin
Adafruit DRV8871	IN1	IN2

Headlight

- Select the Low and High Beam power limit.

Bell

- The Bell has two modes
  - On and Off
  - Pulsed Mode for use with solenoid. Here you set the on and off pulse time. This will repeat until the Bell is turned off.

WiFi Channel

- Leave at default or change to a new channel, if desired.
- **NOTE** – The transmitter much match the receiver.

Battery Type (this is still experimental)

- Select your battery type. This affects the state-of-charge calculation.
- Leave Off, if desired.
- The Dip Switch on the circuit board must be set properly for this function to work.
  - Select the battery voltage on the Volt Select dip switch under the cover. ****NOTE***: If you select a lower voltage than the actual battery voltage, you will damage the receiver. If you're not sure, leave both Off and disable the battery check in the Web UI.

Volt Select Dip Switch		
down is OFF, up is ON		
Battery Voltage	**Left**	**Right**
36 volt	Off	Off
24 volt	Off	On
12 volt	On	On

Speed Ramp

- This is a minor setting to slow down the response of the WebUI Train Controller. Leave as is for normal operation.

Battery Status Panel

- Shows the **current measured battery voltage** (2 decimals) and the current state (5 = Full … 1 = Critical)
- Shows the current **compensation factor**

- Displays a **table of state thresholds** for the selected battery type, with the current state highlighted ("◀ NOW")

Battery Calibration (Do this once if using the Battery Status Function)

- Enter the **actual multimeter voltage** in the "Actual multimeter voltage (V)" field and press **Calculate & Save**
- Invalid inputs are rejected with a red error message on the page

Train Controller

- The purpose of this function is to allow you to control your locomotive in an Emergency situation when you cannot use your RailWave Transmitter.
- It is not designed for full time use.
- It has delayed/slow response times and it's best to use it at a slow pace just to get you back to the yard.
- **Throttle slider** (0–100 %, vertical). Uses onchange — **the command is sent when you release the slider**, not continuously.
- **Invert Direction** checkbox — flips the direction convention for the WebUI **only**

RECEIVER LED INDICATORS

Direction & Speed LED

STATE	COLOR
Boot	Orange
Configuration mode	Solid blue
Link lost	Purple blink
Horn active	Yellow
Moving forward	Green (brightness proportional to speed)
Moving reverse	Red (brightness proportional to speed)
Stopped	Off

Battery Status LED

State	Color
5 Full	Green
4 Good	Blue
3 Fair	Yellow
2 Low	Solid red
1 Critical	Red flashing
0 / unknown	Off

RECEIVER ACCESSORIES CONNECTION

Refer to Fig. 2 (above)

- The RailWave receiver provides a ground path for your accessories.
- You must supply your accessories with Positive battery power from the battery or a DC-DC converter.
- The negative side of the Accessory will go to the RailWave Receiver. Refer to Fig 3 for connection details.
- **Flyback Diode** - Accessories like bells and horns are considered inductive loads and they will generate a high voltage when they are turned off. It's important to connect a Flyback Diode to each device so the high voltage does not go back to the RailWave Receiver. Refer to Fig 1 for connection information. Something like a **1N5408 (*2 included***) is generally sufficient. The STRIPE side goes to the positive wire.
- **POWER CONNECTIONS**
    - Connector #2 has 2 negative/ground terminals. This is so sufficient current can flow to the battery when all accessories are on.
    - Connector #2 has a terminal for POSITIVE POWER. This terminal connects to whatever power source is being used to power the accessories. It's an electrical protection wire that flows excess voltages back to the to power source weather that be the battery or DC-DC converter. Do not skip this connection.
- Ditch Lights operate when the Bell is on.
- Brake – There is not button on the RailWave Transmitter to operate the brake. There is a configuration that allows the Aux button to trigger the brake circuit. This is an on/off circuit that can be used with electric dump vavles.

RECEIVER NORMAL OPERATION & SAFETY

Zero-speed safety

At boot, and after every link loss, motion is inhibited.

- The receiver must receive a 0 speed message from the transmitter before it is unlocked and ready to move.
- The Web UI can override this safety but the Web UI always starts at zero since it's part of the same firmware.
- Only the Transmitter or the Web UI can control the locomotive at one time.

TRANSMITTER SUMMARY

- The RailWave Transmitter is a wireless locomotive controller with low-latency transmission on a configurable Wi-Fi channel.
- Top mounted toggle switch is used to turn the device On and Off.
- 6 water resistant push buttons control direction and accessories
    - Control Features: Motor speed, forward/reverse, lights, ditch lights, horn, bell, sound activation, and a configurable AUX button.
- 5 LED indicators provide status
- Multi-Locomotive & Consist Support: Stores up to 3 individual locomotive configurations. It supports Multiple Unit (MU) consist grouping with individual power trimming (0–100%).
- Inversion Protocols: Includes a per-unit "Locomotive in Reverse" option to invert motor and directional lighting for physical backward orientation.
- Safety: Enforces a **Speed=0** safety check requiring the speed control to be fully zeroed before motion is authorized.
- On-Board Diagnostics: Features a Webpage User Interface (WebUI) that allows configuration and interactive button, LED, and potentiometer testing/calibration.
- Updates: Offline Over-The-Air (OTA) firmware updates

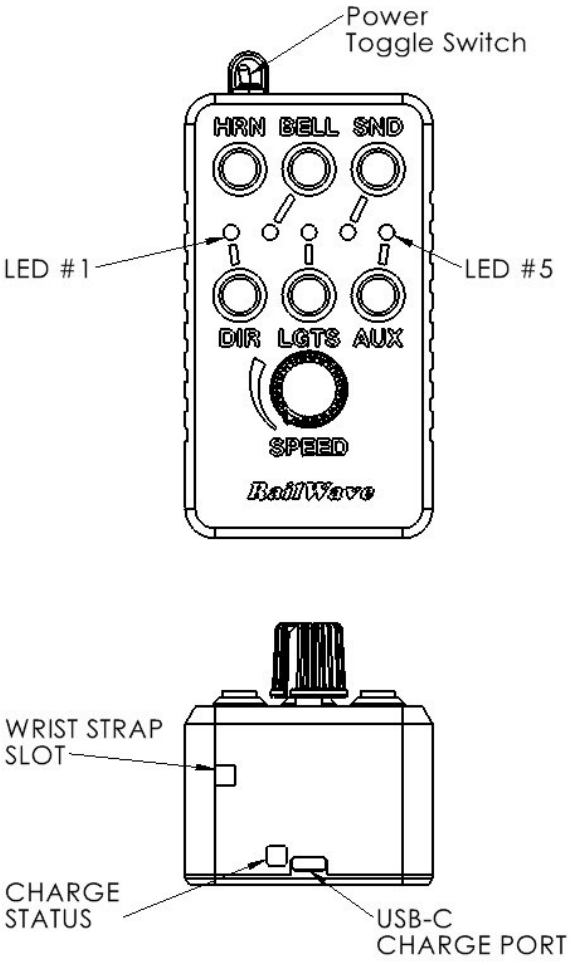

Fig. 4

TRANSMITTER CONFIGURATION

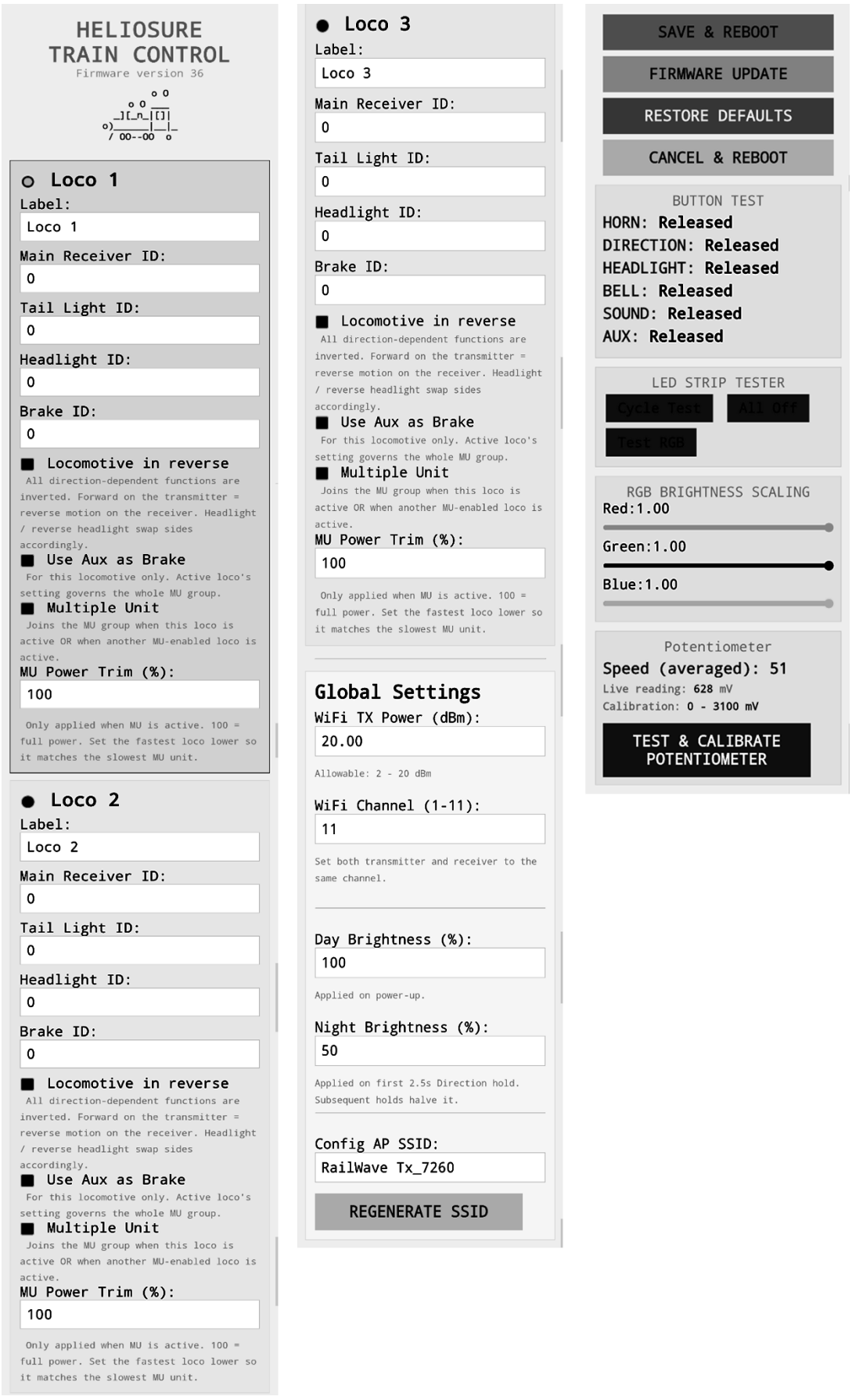

1. To enter the WebUI, press and hold the HRN & DIR buttons while turning on the transmitter with the toggle switch.
    1. When the Transmitter's LED is blue, a WiFi network is created. The network name will begin with "RailWave_TX" and have a random number after that.
    2. Connect to the Transmitter's WebUI (webpage user interface) with any device capable of connecting to a WiFi network and has a web browser.
    3. Select that WiFi network and then proceed to Sign-in. That will force the browser to a configuration page for the Transmitter.
2. The Blue dot on the radio button indicates the active locomotive.
3. Assign a Label/Name for each locomotive
4. **Assign the Main Receiver ID. This must match the number you assigned in the Receiver's WebUI.**
5. Taillight ID, Headlight ID, and Brake ID can be ignored right now since those modules do not exist at the moment.
6. Locomotive in reverse is used if your locomotive is operating backwards. It is inverts the forward and reverse function and also the headlight and reverse headlight if those are wired to the RailWave Receiver.
7. Use Aux as Brake converts the Aux button to a brake button. The receiver will trigger the Brake circuit instead of the Auxiliary circuit.
8. Multiple Unit (MU)
    1. You can MU any combination of the 3 locomotives. To use it, MU must be selected on each and you must have one of the MU locomotive active.
    2. When locomotives are slightly different power/speed, you can trim the faster locomotive down. This function scales down the speed command.
9. WiFi TX Power is used to limit the transmission power of the transmitter and receiver. It's best practice to use the lowest amount of power necessary for your application. This helps conserve battery power, reduces interference with other radio systems, and reduces the distance a locomotive can be away from the transmitter. 13dBm is the default setting. (2-20dBm is allowed.)
10. WiFi Channel. It's best to leave it at 11 but if you have a lot of interreference on that channel, you can select a new channel on the Receiver and Transmitter. **Both must match to communicate.**
11. Day Brightness is used to reduce the LED brightness in Day mode.

12. Night Brightness is used to reduce the LED brightness in Night mode.
13. BUTTON TEST - Press and release each button on the transmitter to test their functionality
14. LED STRIP TESTER – Press Cycle Test to ensure each LED can display red, green, and blue
    1. Here you can also limit the brightness of each individual LED. This is used to compensate for uneven brightness that can occur in the manufacturing of LEDS
15. Potentiometer
    1. Displays the Speed (0 to 255) sent to the receiver. This is an averaged value the minimized normal voltage fluctuations in readings.
    2. Live reading is the instantaneous reading from the potentiometer. This always fluctuates a bit.
    3. Calibration shows the low and high limits of the potentiometer.
    4. Test & Calibrate Potentiometer runs a voltage limit, noise, and dead zone test on the potentiometer. It will generate a report on the status of the potentiometer letting you know it's status. At the same time, it will calibrate the low and high voltage limits in case there is any drift.

TRANSMITTER NORMAL OPERATION

NOTE: The transmitter will automatically turn off after **1 hour** of no interaction with any knob or button.

1. Push the top toggle switch towards center to turn on the transmitter.
2. Observe the boot sequence of the LEDs.
    a. The transmitter's LED #1,2, or #3 (see Fig 4) will be orange. This indicates which locomotive is the active one.
    b. LED #5 (see Fig 4) will be either green or red. Green is for single locomotive and red is for MU (mulitiple unit).
3. After booting
    a. If LED #1 continues to blink orange, then no Locomotive IDs have been programmed.
    b. If connection to the Receiver was successful, LED #1 will be Green.

    c. If the connection was not successful, either LED #1,2, or #3 will blink Purple.

4. LED Color
    a. Orange to indicate configuration setting
    b. Purple to indicate lost connection to receiver
    c. Blue to indicate that the WebUI is active.
5. **Speed lockout** - The locomotive will not move until the Speed knob is turned fully counter-clockwise at least one time per power cycle
6. **Direction** – The change direction, the Speed must be turned fully counter-clockwise.
7. **Horn** – The horn button must be held down for the horn to honk.
8. **Headlight** – press once for Low beam, press again for High beam. Each press will toggle between Low and High. Press for 2-seconds to turn Off.
    a. A yellow LED indicates Low beam.
    b. A green LED indicates a High beam.
    c. A red LED indicates the lights are Off
9. **Bell, Sound, Aux** – press to turn on and press to turn off
    a. A green LED indicates On.
    b. A red LED indicates Off.

SELECT ACTIVE LOCOMOTIVE

This method avoids having to connect to the WebUI to change locomotives.

1. To select Locomotive #1 as the active locomotive, press and hold HRN while powering on the Transmitter.
2. To select Locomotive #2 as the active locomotive, press and hold BELL while powering on the Transmitter.
3. To select Locomotive #3 as the active locomotive, press and hold SND while powering on the Transmitter.